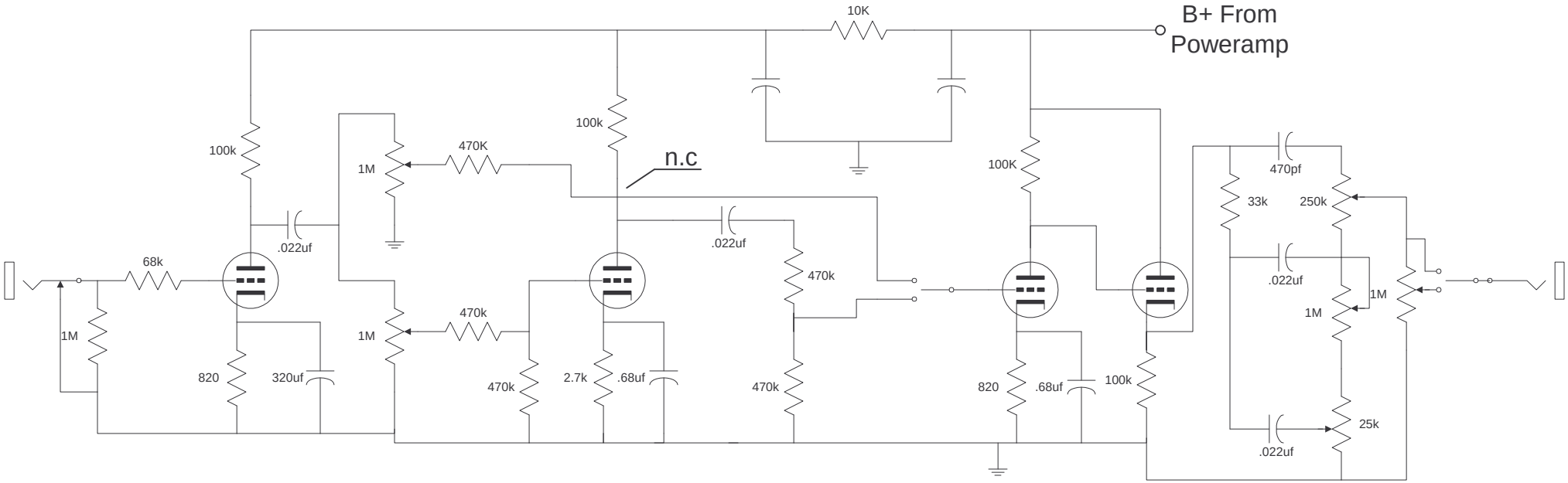
10K
B+ From
Poweramp
100k
470K
1M
n.c
100k
100K
470pf
33k
250k
.022uf
.022uf
68k
470k
.022uf
1M
1M
1M
470k
1M
820
320uf
470k
2.7k
.68uf
470k
820
.68uf
100k
25k
.022uf